EL1000

LifeSpan™

Natural FIT Elliptical

Owners Manual

by PCE HEALTH & FITNESS

For safe use and product knowledge, please completely read this Product OWNERS MANUAL.

LifeSpan
by PCE
HEALTH & FITNESS

Welcome to LifeSpan

Congratulations in taking a step forward to increase your level of physical activity or add variety to your current exercise program. Physical activity is now more than ever a necessity to keep your body healthy and fit. Whether your motivation is to Lose Weight, manage a Chronic Disease like diabetes, Sports Training or just live a Healthy Lifestyle, LifeSpan products can help you achieve your health and fitness goals.

In this manual we have included exercise information that is specific to each of these 4 key motivations for exercise, we also invite you to the LifeSpan Fitness web site at www.LifeSpanfitness.com where we include additional information and tools to help you maintain your exercise program and achieve your health and fitness goals.

The LifeSpan Home series of cardio equipment is designed for the more than 60% of consumers who say that they prefer to exercise in the comfort and privacy of their own homes. Each Home series product is designed and manufactured to exceed your expectations for quality and durability, simple assembly and ease of operation.

Please read this manual thoroughly before assembly and operation of your new LifeSpan equipment. It includes information on proper operation, safety precautions, product assembly and ongoing maintenance.

Remember that some types of services should only be performed by a qualified service technician. In the instance that service is required, please contact your authorized LifeSpan retailer or log onto our website and select the Customer Support option. Complete the information requested and we will respond to your inquiry within 2 business days or you can call us directly at 801.973.9993 and select the option for Customer Service.

PCE Health and Fitness
PO Box 981316
Park City, Utah 84098-1316
Phone: 801.973.9993
Fax: 801.973.9923
www.lifespanfitness.com

Neither PCE Health and Fitness nor its representatives can accept responsibility for any damages or injury incurred as a result of information presented in the manual except under the terms of the product warranty.

Table of Contents

- Welcome 3
- Specifications 5
- Limited Home Use Warranty 6
- Important Safety Precautions 7
- Being Healthy and Getting Fit 8
- Assembly Instructions 20
- Console Operations 25
- Program Overview 28
- Leveling 35
- Moving, Troubleshooting and Maintenance 36

Specifications

	EL1000
Console Readouts	Time, Calories, Distance, Heart Rate, Speed, Resistance Load
Display	Multi-Color LCD
Programs	Manual, Preset (8), User Set-up (2), Heart Rate Control and Watt Control (1)
Program Matrix	16 Rows by 20 Columns
Levels of Resistance	16 Levels
Program Buttons	N/A
Audio	N/A
Heart Rate	Grip Pulse
Mechanics and Performance	
Stride Length	18"
Pedal Spacing	2.5"
Step Up Height	8.0"
Resistance System	Magnetic - Eddy Current
Pedals	Oversized
Max. User Weight	300 lbs
Dimensions	52" L x 28"W x 61" H
Transport Wheels	Front Mounted
Residential Warranty	
Frame	Lifetime
Eddy Current Brake (ECB)	Lifetime
Parts	3 Years
Labor	1 Year

LifeSpan

Limited Home Use Warranty

The LifeSpan Natural Fit Elliptical comes with the following limited warranty, which applies only for the use of the cross trainer in the home, for residential, non-commercial purposes.

Frame:	Lifetime
Eddy Current Brake:	Lifetime
Parts:	3 Year
Labor:	1 Year

PCE Health and Fitness warrants that the equipment it manufacturers is free from defects in material workmanship under normal use and service. The periods above are based on the date of purchase. During these periods, PCE Health and Fitness will repair or replace any defective part. Free labor is included for the first year on all parts that are not normally assembled or replaced by the customer. Customer may be responsible to pay for Service Technician travel time where travel in excess of 20 miles is required.

If within the time frames specified above, any part fails to operate properly, log onto our web site at www.lifespanfitness.com and click on Customer Support or you can contact us directly at 801.973.9993 and select the option for Customer Service.

PCE Health and Fitness reserves the right to make changes and improvements to our products without incurring any obligations to similarly alter any product purchased. In order to insure our product warranty and to ensure the safe and efficient operation of your LifeSpan product, only authorized parts can be used. The warranty is void if any parts other than those provided by PCE Health and Fitness are used.

Exclusions and Limitations:

- This warranty does not apply to any defects caused by negligence, misuse, improper assembly or maintenance, accident, or an "act of god".
- This warranty does not apply to discoloration of paint or plastics.
- PCE Health and Fitness shall not be responsible for incidental or consequential damages.
- This warranty is nontransferable from the original owner.

Registration

You must register your LifeSpan product before a warranty claim can be processed. To complete your registration online go to www.lifespanfitness.com and Register Products or fill out the warranty card provided and mail it today. Registration cards must be completed and sent to PCE Fitness within 30 days of purchase to activate the Product Warranty. Product Warranties are not valid unless card is properly completed and mailed within 30 days.

Important Safety Precations

When using exercise equipment, basic precautions should always be followed, including:

- Never drop or insert any object into any opening.
- Never operate your elliptical trainer if it has been damaged or even partially submersed in water.
- Do not use outdoors, near swimming pools or in areas of high humidity.
- Keep products on a solid , level surface. Do not operate on deeply padded, plush or shag carpet. Damage to the carpeting may result.
- Use the exercise product for its intended use as described in the Owners Manual.
- Do not use attachments that are not recommended by LifeSpan.
- Wear shoes with rubber or high traction soles.
- Do not use shoes with heels, leather soles, cleats or spikes.
- Keep hands and feet away from moving parts.
- Use caution while participating in other activities while using your elliptical such as watching. television or reading. These distractions my cause you to lose balance which may result in injury.

Children and Pets

- Keep children off your elliptical at all times.
- When in use, children and pets should be kept at least 10 feet away.

Other Safety Tips

- Always consult a physician before beginning this or any exercise program.
- If you experience chest pains, nausea, dizziness or shortness of breath, stop exercising immediately and consult your physician before continuing.

Cleaning

- Clean only with mild soap and a slightly damp cloth. Never use solvents when cleaning.

Note: Read all instructions before begining use.

Being Healthy and Fit

How Much Should You Exercise

Congratulations again for making a commitment to improve your health and fitness with your LifeSpan Elliptical purchase. At LifeSpan we are committed to not only providing you with outstanding exercise equipment but we are also committed to providing you with the most current medically based exercise recommendations so you achieve great success in your exercise program. Our Director of Medical Programs has developed the following recommendations based on the most recent medical fitness research to provide you with guidelines that you may use to get started in your exercise program, achieve success and maintain your exercise program for the rest of your life! After all, the greatest gift you can give yourself is the "Gift of Health & Fitness!"

At the time of the publication of this Owners Manual new physical activity guidelines have just been announced in Washington D.C. This announcement marks the first time the federal government has released exercise recommendations for the public.

Choose your age category below, and find recommendations, research and tips from ACSM and AHA. Our LifeSpan team along with the American College of Sports and the American Heart Association are proud to serve as a resource to help people understand the new guidelines and ultimately live healthier, more active and higher quality lives.

Guidelines for healthy adults under the age 65

Basic recommendations from ACSM and AHA:
Do moderately intense cardio 30 minutes a day, five days a week
Or
Do vigorously intense cardio 20 minutes a day, 3 days a week
And
Do 8 to 10 strength-training exercises, 8 to 12 repetitions of each exercise twice a week.

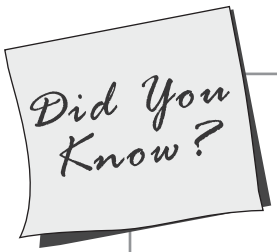

Moderate Intensity: means working hard enough to raise your heart rate and break a sweat, yet still being able to carry on a conversation. It should be noted that to lose weight or maintain weight loss, 60 to 90 minutes of physical activity may be necessary. The 30-minute recommendation is for the average healthy adult to maintain health and reduce the risk for chronic disease.

Guidelines for Adults Over Age 65
(or adults 50-64 with chronic conditions, such as arthritis)

Basic Recommendations from ACSM and AHA
Do moderately intense aerobic exercise 30 minutes a day,
five days a week
Or
Do vigorously intense aerobic exercise 20 minutes a day, 3 days a week
And
Do 8-10 strength-training exercises, 10-15 repetitions of each exercise
2-3 times a week
And
If you are at risk of falling, perform balance exercises
And
And Have a physical activity plan

Older adults or adults with chronic conditions should develop an activity plan with a health professional to manage risks and take therapeutic needs into account. This will maximize the benefits of physical activity and ensure your safety.

Tips for Meeting the New Exercise Guidelines

With busy work schedules, family obligations, and packed weekends, it can often be difficult to get the recommended amount of physical activity. Try these tips for incorporating exercise into your life:

Do it in short bouts: Research shows that moderate-intensity physical activity can be accumulated throughout the day in 10-minute bouts, which can be just as effective as exercising for 30 minutes straight. This can be useful when trying to fit physical activity into a busy schedule.

Mix it up: Combinations of moderate and vigorous intensity physical activity can be used to meet the guidelines. For example, you can exercise at a moderate intensity on your Elliptical for 30 minutes twice per week and then two other days per week exercise at a higher intensity to provide your body with a constantly changing workout. Having ongoing changes in your workout will cause your body to receive a greater training response from your workouts, than if you simply did the same exercise every day for the exact same amount of time at the same intensity. Repetitive workouts will not cause an improvement in your overall fitness level because your body becomes accustomed to the workouts, and therefore your overall fitness level will no longer improve.

Set your schedule: Research has proven that most people prefer to exercise at home. Having a home based exercise program saves time, is more comfortable and allows you to do it at a time when it is most convenient for you. One of the main keys to a successful exercise program is to set aside specific days and time for exercise, making it just as much a regular part of your schedule as everything else.

Starting an Exercise Program

Starting an exercise program can sound like a daunting task, but just remember that your main goal is to boost your health by meeting the basic physical activity recommendations.

Before you begin an exercise program, or substantially increase your level of activity, be sure to consult your primary care physician. In preparation for a visit you may also want to take the PAR-Q Assessment. This Physical Activity Readiness Questionnaire (PAR-Q) will help you determine your suitability for beginning an exercise program and prepare you for discussing your physical activity program with your physician.

1. Has your doctor ever said that you have a heart condition or that you should participate in physical activity only as recommended by a doctor?
2. Do you feel pain in your chest during physical activity?
3. In the past month, have you had chest pain when you were not doing physical activity?
4. Do you lose your balance because of dizziness?
5. Do you ever lose consciousness?
6. Do you have a bone or joint problem that could be made worse by a change in your physical activity?
7. Is your doctor currently prescribing drugs for your blood pressure or a heart condition?
8. Do you know of any reason you should not participate in physical activity?

If you answered yes to one or more of the questions, if you are over 40 years of age and have been inactive or if you are concerned about your health, consult a physician before beginning an exercise program or substantially increasing your physical activity. If you answered no to each question, then it's likely you can begin an exercise program.

Pre-Exercise Resting Heart Rate Check

Before beginning your exercise program it is recommended that you check your resting heart rate. Your resting heart rate should be taken in a seated, relaxed position. Find your resting pulse and begin your count with "zero" on the first heart beat. Continue counting each time you feel your pulse until you have counted for a full 30 seconds. Next, double the number that you counted for 30 seconds and you now have your pre-exercise resting heart rate. Remember this number as we also recommend taking a post-exercise resting heart rate after you have completed your exercise program and you will want to remember your pre-exercise heart rate so you can compare the two heart rate measurements.

Heart Rate Training

You must train at a variety of different heart rates in order to stimulate your body to improve your fitness level. Your training heart rate zone is a critical element in exercise. Taking your pulse and figuring your heart rate during a workout is one of the primary indicators in determining the intensity level at which you and your heart is working.

As a general rule, you should exercise at an intensity between 50% -85 % of your heart rate reserve. Your individual level of fitness will ultimately determine where you fall within this range**.**

Use the following table as a guide for determining your **Exercise Intensity** level:

Beginner or low fitness level . . .40% - 60%
Average fitness level . . . . . 60% - 70%
High fitness level . . . . . 75% - 85%

220 - Age = Maximum Heart Rate (MHR)
MHR – Your Resting Heart Rate = HRR (Heart Rate Reserve)
HRR x Exercise Intensity + Your Resting Heart Rate = Your Training Heart Rate at the Calculated Intensity

For example, Elaine is 33 yrs old, has a resting heart rate of 75 and she is just beginning her exercise program (her intensity level will be 50% - 60%.) Elaine's training heart rate zone will be 131-142 beats per minute:

Elaine's Minimum Training Heart Rate is set at an intensity of 50%
220 - 33 (Age) = 187
187 - 75 (Rest. HR) = 112
112 x .50 (Min. Intensity) + 75 (Rest. HR) = 131 Beats/Minute = Elaine's Training Heartrate at 50%

Elaine.s Maximum Training Heart Rate is set at an intensity of 60%
220 - 33 (Age) = 187
187 - 75 (Rest. HR) = 112
112 x .60 (Max. Intensity) + 75 (Rest. HR) = 142 Beats/Minute = Elaine's Training Heartrate at 60%

Periodically, take your pulse during your exercise session to gauge your intensity level.

Visit the LifeSpanfitness web site for tools on calculating your training heart rate and to learn more about the importance of heart rate training.

Heart Rate Training Zones

Beginning Exerciser Heart Rate Training Zone
Zone 0 - Low Heart Rate Zone: 40% - 50% of your Max HR
Exercise Benefits: An ideal heart rate training zone if you are a beginning exerciser, or to use on Active Rest, easy or recovery training days.

Easiest: Most Comfortable Zone
Zone 1 - Healthy Heart Zone: 50%- 60% of your Max HR
Exercise Benefits: Body fat decreases, blood pressure lowered, cholesterol lowered, muscle mass improvements, decreased risk for degenerative diseases, safety high.

Cruise Zone: You can train for extended periods of time in this zone
Zone 2 - Temperate Zone: 60% - 70% of your Max HR
Exercise Benefits: Gain muscle mass, lose fat mass, strengthen heart muscle, your muscles to burn fat, your fat cells to increase the rate of fat release. (75% - 85% of all calories from fat as fuel)

Transition Zone: moving from health zones to performance zones
Zone 3 - Aerobic Zone: 70% - 80% of your Max HR
Still feels comfortable, you will break a sweat, but no anaerobic burn sensation
Exercise Benefits: Improved overall functional capacity with increase in the number and size of blood vessels, increased vital capacity, respiratory rate, increase in size and strength of the heart.

Max Calorie Burn Zone
Zone 4 - Threshold Zone: 80% - 90% of your Max HR
Exercise Benefits: Max fat burn, but you must be fit enough to train with some oxygen present for additional fat burn. No fat burning if exercising above fat burning heart rate.

Peak Race Zone . Athlete Only Zone!
Zone 5 - Performance RedLine Zone: 90% - 100% of your Max HR
Exercise Benefits: Highest total calories burned, but lowest percentage of fat calories. This zone is ONLY for the VERY HEALTHY & FIT!!! Spending too much time in this zone, even for elite athletes can be painful, cause injuries and lead to overtraining, which leads to poor performance!

Warm-up and Cool Down

Regardless of your exercise program it's important that you always warm up before each workout and cool down at the end of the workout.

Warm-up: Be sure to always warm-up for at least 3 – 8 minutes or even longer if you are sore and stiff from a previous workout. A warm-up should consist of easy, rhythmic activities at a pace that you can very easily carry on a full conversation while exercising. You can use your elliptical trainer to warm up or other activities to provide variety. Involve both your upper and lower body when warming-up . As you complete your warm-up gradually increase your exercise intensity up to your ideal exercise intensity for your workout. By moving from your warm-up intensity slowly into your higher workout intensity you will significantly decrease your risk of injury in your workout.

Cool Down: Following your workout you should always save time to cool down. Once you have completed your core workout, slow down your intensity to the same intensity you used in your warm-up. Maintain that pace for at least 5 minutes, longer if again you are still sore from a previous activity. Be sure to continue your cool down until you feel completely recovered and find your resting heart rate to be within 10 beats of your pre-exercise resting heart rate within 5 minutes of ending your exercise. Remember if you are sore tomorrow from your workout today, you did not cool down sufficiently, or if you resting heart rate does not return to within 10 beats of your pre-exercise heart rate within 5 minutes of ending your workout, you either did too much in your workout that day, or you did too much in the days before this workout. Continue cooling down until you feel that your body is fully recovered and your resting heart rate is close to being within 10 beats of your pre-exercise resting heart rate. Be consistent with your cool down and pay attention to how your body feels. You will reduce your risk of injury, feel better following your workouts and be ready for your next workout session feeling refreshed and energized.

Your Motivation to Exercise

Understanding what motivates you to exercise is important for you to customize your exercise program and help you focus on meaningful goals in your exercise program. At LifeSpan our research indicates that people exercise with 4 primary objectives in mind. These are Weight Loss, Chronic Disease Management, Healthy Living and Sports Training. For more information visit the lifespan fitness web site and www.lifespanfitness.com

Weight Loss

If you're not at a healthy weight your not alone. The good news is that exercise and proper nutrition can help you be successful in losing weight. The magic formula for weight loss is to burn more calories than you consume – simple to say, but difficult for many to implement.

Why Diets Don't Work

Numerous studies prove diets just don't work for a majority of people trying to lose weight. A "dieter" tends to deprive their body the food they need, creating a survival mode in which their body reduces the calories used and preserves them for later. Their body becomes used to operating on this restricted calorie level and lowers their metabolism, making it even more difficult to burn stored fat calories and lose weight.

Instead of dieting, effective weight loss can be achieved by reducing caloric intake to reasonable levels without starving your body, and getting enough physical activity. Increased physical activity will also decrease your risk of dying from coronary heart disease and reduces the risk of developing other life threatening diseases such as diabetes, hypertension and cancer.

Healthy Lifestyle

Making the appropriate changes to your lifestyle is often critical to losing weight and keeping the weight off. Below are characteristics of adults who lost at least 30 pounds and have kept it off for at least 1 year. Most members of the National Weight Control Registry attribute their success to continuing to maintain a low calorie, low fat diet and doing high **levels of activity.**

Habits that help the successful…

- 78% eat breakfast everyday
- 75% weigh themselves at least once a week
- 62% watch less than 10 hours of TV per week
- **90% exercise at least one hour per day on average**

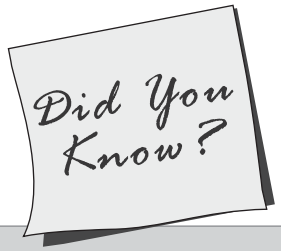

You have to burn 3,500 calories to lose one pound of fat.
For each pound of muscle you gain you will burn at least 100 more calories a day
Varying your workout will help you lose more fat than if you simply walk 30 minutes at a steady pace.

Training Tips for Weight Loss

To achieve success in your weight loss exercise program focus on the following easy to follow guidelines:

- **Enjoy Your Exercise -** Ease into your exercise program every day when you are a beginner so you enjoy your exercise as much as possible.

- **Know Your Exercise Target Heart Rate -** Ask your physician for your customized Target Heart Rate so you will know how hard or how easy to exercise on each of your workout days.

- **Give Yourself a Break** – If you're not feeling well one day or if you find yourself not looking forward to your exercise program anymore, it may be time to take a break.

- **Change Your Exercise Routine -** Exercise that will give you weight loss results needs to be constantly changing so your body doesn't become bored and reach a "fitness plateau".

- **Move as Much as Possible -** In addition to your regular exercise program, remember to move as much as possible each day of your life! Studies have shown that overall calorie burn is greatest achieved if you workout regularly using a variety of exercise programs.

Healthy Living

At LifeSpan we're here to help you live your best life. Whether you're a busy mom, an active volunteer, retiree, or a career professional, taking the proactive steps to maintain your good health and fitness is commendable. Using proven best practice techniques can help you get the most benefit out of your time exercising.

Dedicated to a Good Life

Living well and proactively taking care of your body is important. We value your lifestyle of eating healthy and exercising regularly. These factors will help you live a long and healthy life with less stress, better sleep and lower the risk of many chronic diseases. Reading the information provided in this section may add value to your exercise regiment.

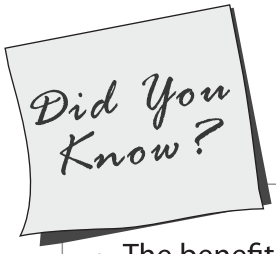

- The benefits of exercise are tremendous! You may know that when you exercise your brain releases mood-enhancing hormones called "endorphins". These "endorphins" may actually improve your body's insulin action, thereby reversing or decreasing insulin resistance, a condition that can lead to diabetes.
- The average individual has a resting heart rate between seventy and eighty beats per minute, whereas it is not uncommon for an Olympic cross country skier's pulse to be in the forties
- For each pound of muscle you gain you will burn at least 100 more calories a day without even doing any exercise! A body that has more muscle has a higher metabolism than a body with less muscle on board.

Disease Management

Preventing or managing a chronic disease is a matter of life for many adults and children alike. In fact the statistics are staggering.

- 21 million people, or 7% of the U.S. population , have diabetes, and over 54 million are pre-diabetic (American Diabetes Association)
- Heart Disease is the #1 killer of women – one in four women die from Heart Disease (American Heart Association)
- Over 40% of African Americans have high blood pressure
- Many research studies indicate that moderate exercise activity increases the level of HDL (good cholesterol)
- As many as 90,000 cancer deaths per year could be prevented if Americans could only maintain a normal, healthy body weight (American Cancer Society)

Exercise is the most forgotten prescription for everyone! In fact, exercise is the best prescription to manage many diseases and chronic conditions. Regular exercise has a positive effect on the general health of people fighting a specific or multiple diseases and/or chronic conditions, and can lesson the severity of emotional disorders by providing a sense of greater control over the disease, illness or injury.

Physicians frequently prescribe exercise in conjunction with prescription medicine. The downside of most doctor visits is that while you may be told to exercise, you may not be given any specifics about how to exercise. Your doctor may recommend you exercise for 30 minutes a day 3-5 days a week, but the discussion may end there, or you may have balance challenges that prevent you from beginning a traditional program. Discuss the type of exercise they recommend and ask for an exercise program that has been designed specifically for you.

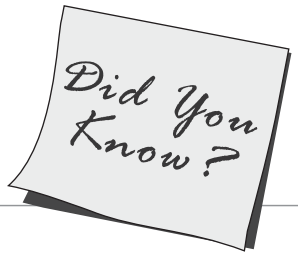

A single exercise session was proven to improve the function of blood vessels and blood lipid levels to a significant degree, and the benefits persisted the next day.

Regular exercise helps keep arteries elastic, even in older people, resulting in blood flow and normal blood pressure. Sedentary people have a 35% greater risk of developing hypertension than athletes do.

Keeping blood glucose, blood pressure, and cholesterol in control can make a difference in reducing your risk for heart attack or stroke.

Resting heart rate averages 60 to 80 beats per minute. Your resting heart rate typically decreases with age. In middle-aged, unconditioned, sedentary individuals the resting rate can exceed 100 beats per minute.

Sports Training

Here you'll learn how to maximize your training to achieve your sports performance goals based on the most current sports science research. As a training athlete it is vitally important to focus on a well-rounded, medically-based approach to your fitness and performance program.

Whether you're training for an upcoming 5K or half marathon, preparing for a 100 mile bike ride, or seeking to maintain your tennis or golf game, the information in this section can help you enhance your competitive edge whether you're competing against others or just yourself.

Five Tips to Enhance Your Training Program

The following tips will help you enhance your training program so that you will prevent over-training, maximize your training workouts, reduce your risk of injury, gain the greatest health benefits from your workouts and improve your overall sports performance to your greatest potential.

Tip #1 - Sleep and Your Resting Heart Rate. Try to get at least seven to eight hours of sleep every night. In addition, take your early morning resting heart rate as soon as you wake up. If your early morning heart rate increases by more than ten beats per minute over your previous morning heart rate readings, you may be over-training. Reduce the intensity and the duration of your workouts for a few days and if your heart rate doesn't drop to its slower rate then continue reducing the intensity and even the frequency of your workouts until you find your early morning heart rate back to its normal resting rate.

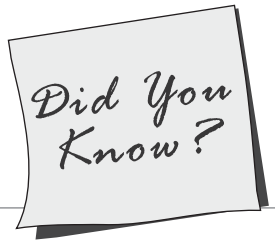

- To speed up recovery after working out athletes should always do a 10-20 minute cool down at a progressively lower intensity to speed the removal of lactic acid from the working muscles and blood.
- As little as six grams of protein (more is not better) may accelerate protein synthesis in the muscles following exercise. Expensive protein powders and amino-acid supplements are no more effective than normal foods (i.e., meat, fish, eggs) at providing the necessary amino acids.
- It is important to replace both water and electrolytes (especially sodium) during and following exercise to minimize dehydration, stabilize blood volume and avoid muscle cramps.
- Although there are exceptions, athletes generally require at least seven hours of sleep each night to perform at their best.

Tip #2 — A Balanced Training Program.
Establish the foundation of your training in a program that is balanced between cardiovascular endurance development and speed development, strength and flexibility development, and agility development. Focus your daily workouts on the following format:

- Full Body Warm-up
- Full Body Stretching
- Agility Drills
- Your Sports Specific Workout
- Full Body Cool Down
- Full Body Stretching

Complete a full strength training session a minimum of three days per week, preferably every other day, to provide your body a full day to recover in between training sessions.

Tip #3 — Cross Training. Try to give your body a break by doing some "cross training" in your weekly workouts. If you are a runner, try cycling or swimming to give your legs and joints a break from the pounding of everyday running. Doing your workouts on exercise equipment that is slightly different than your usual training regimen is another great way of changing your routine to give your body a break and provide a different training stimulus to gain a greater performance benefit. In addition to cross training, give yourself one or two days off every week to allow your body to rest and recover, allowing for a fresh start to your next weeks training.

Tip #4 — Mentally Prepare. Be sure to mentally prepare for your training and competition. Remember, your body will only perform as well as your mind thinks you can.

Tip #5 — Monitor Your Heart Rate. Consider monitoring your heart rate at least three or four days per week in your training. Exercising with a heart rate monitor can significantly improve the specificity of your training and allow you to gain greater aerobic and anaerobic development in your training without having to stop and manually take your heart rate.

Assembly

At LifeSpan we strive to make our equipment easy to assemble and start using. Parts that can be pre-assembled are always assembled and tested on the production line.

Prior to starting the assembly process take all of the parts out of the box, remove plastic bags and lay them out on the floor to become familiar with the components.

Since your elliptical is a heavy piece of equipment it is recommended that you use two people during assembly and follow these assembly instructions to reduce any problems that could occur.

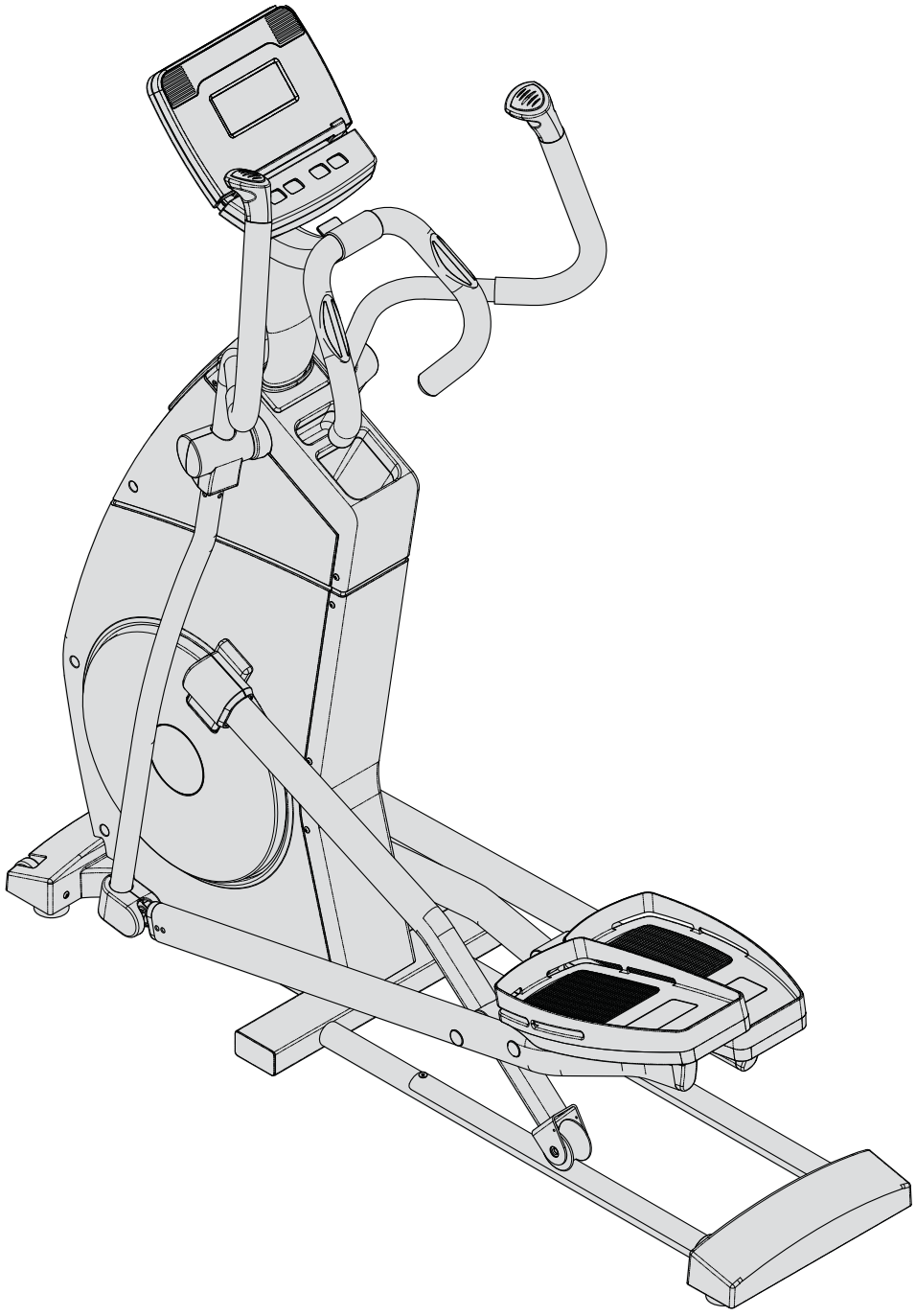

Step 1: Install the Console Support Assembly

A. Place the main frame on a solid level surface.
B. Remove the four Allen Head Screws (A) and lock washers that are pre-installed on the main frame for packaging.
C. Locate the Console Support Assembly and position it above the main frame. Take out the wiring harness (4) from inside the Console Support Assembly and connect it with wiring harness (5) from the main frame. Make sure that they are properly aligned and that no pins are bent when connecting.
D. Replace lock washers and hand tighten all four screws and then securely tighten with the Allen Wrench supplied.

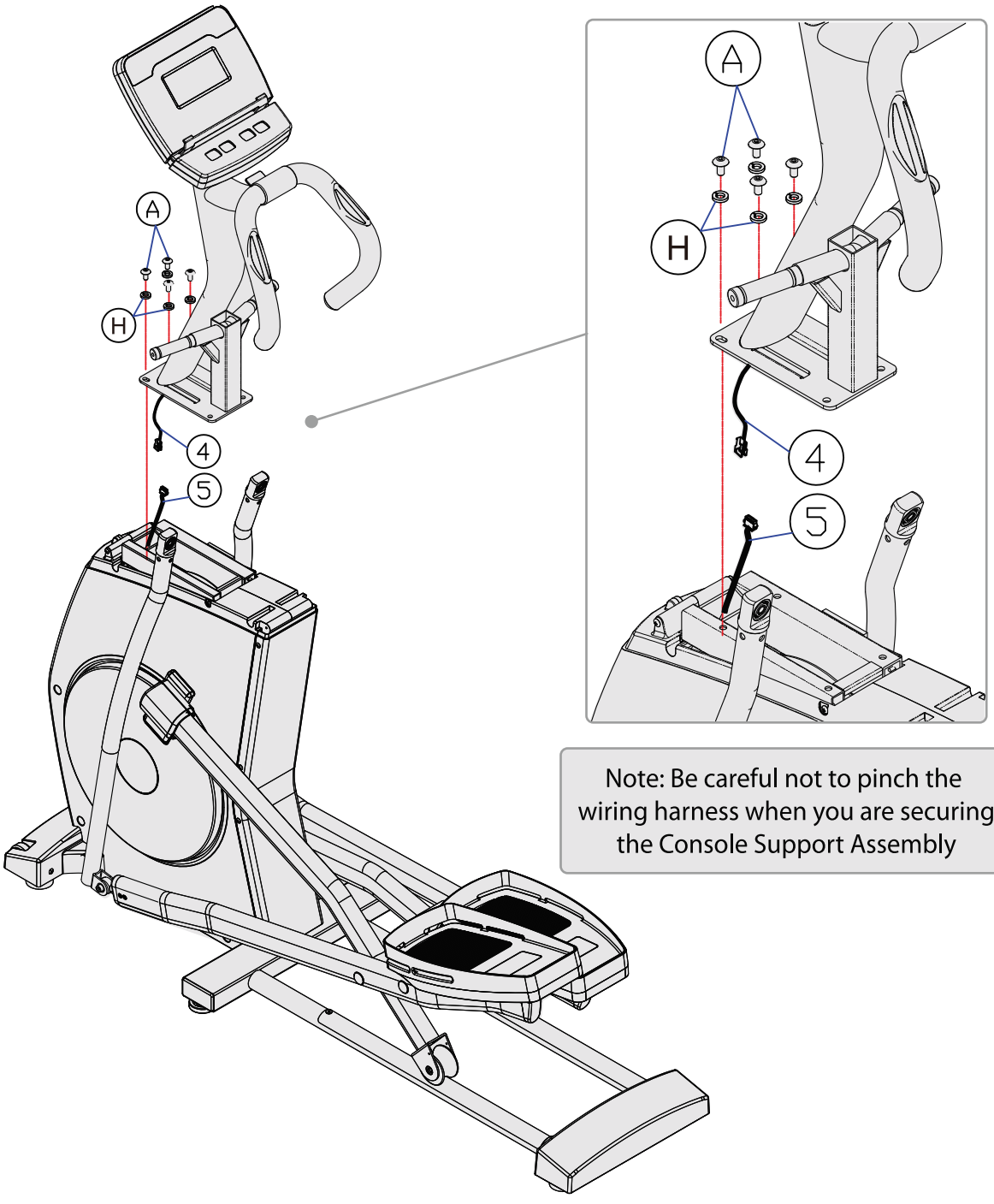

Note: Be careful not to pinch the wiring harness when you are securing the Console Support Assembly

Step 2: Attach Plastic Covers

A. Locate the plastic covers (6), (7), (8) and (9). Remove the assembly screws from the left side cover (6) and the 4 assembly screws (B) from the frame.

B. Place the Left Cover (6) through the left side handlebar pivot and then repeat on the right side (7). First attach the left and right sides together with the 2 Phillips Head screws (B) that were removed from the left side cover (6).

C. Now attach the plastics covers to the frame by replacing the 4 Phillips Head screws (B) that were removed from the frame. Once all the screws are started, securely tighten.

D. Remove the 4 screws from the left and right (C) cover that attach the storage tray in place. Place the storage tray plastic cover (8) in place and secure the 4 Phillips Head screws (C).

E. Snap the front cover (9) in place.

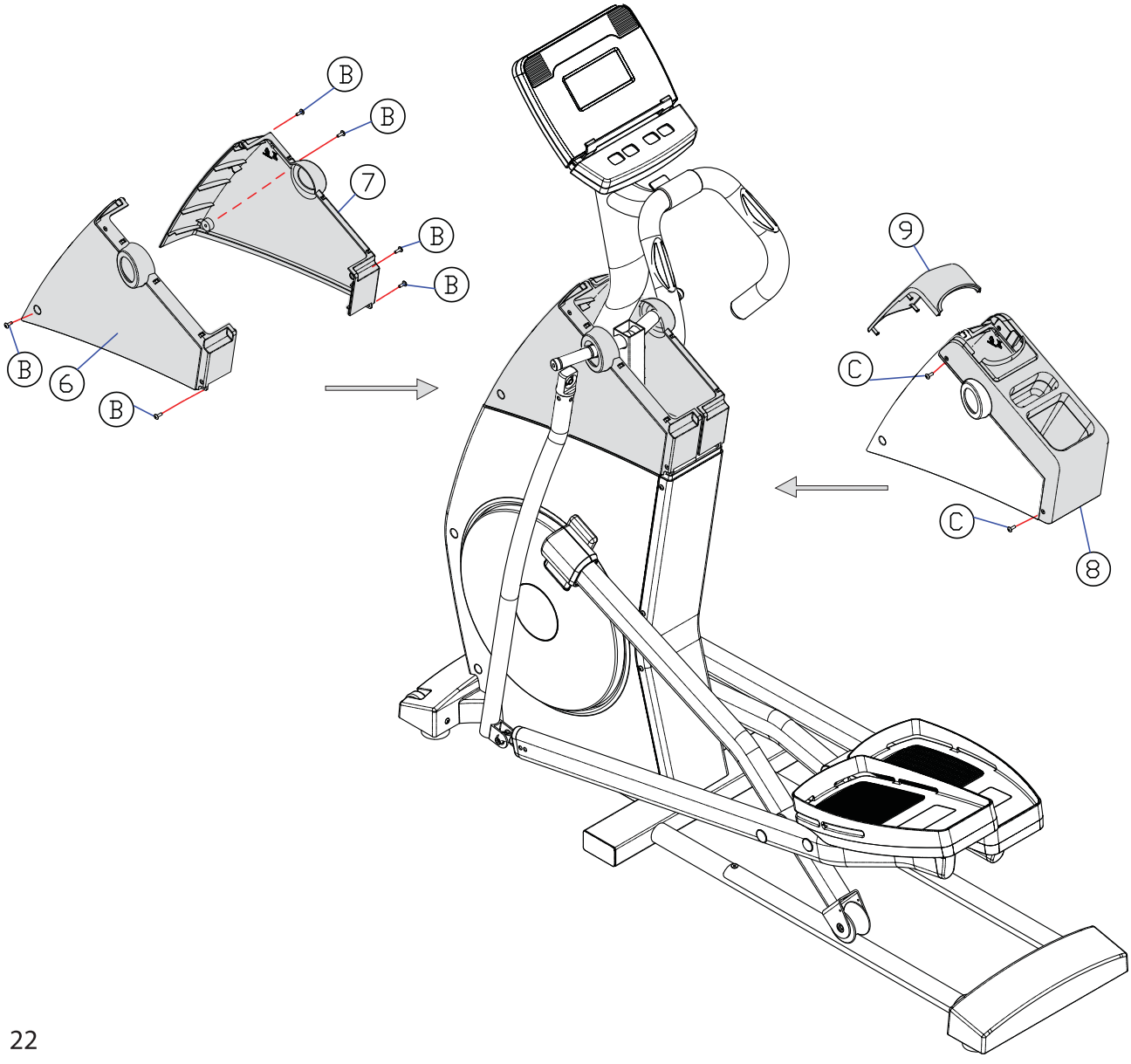

Step 3: Attach Right and Left Side Handlebars

A. Remove the attachment screw and washer that is pre-installed on the handlebar pivot axle.

B. Locate the Upper Left Handlebar (10) and insert the bearing carefully over the left side pivot axle.

C. Place lock washer (H) and washer (D) onto Allen Screw (A) then screw into pivot axle.

D. Align the bracket at the bottom of the Upper Left Handlebar with the hole in the top of linkage (11)

E. Place a washer over screw (F) and insert the through the holes in the bracket at the bottom of the handlebar and the hole in the top of the linkage (11). Place a washer at the end of screw (F) and secure with the nylon nut.

F. Repeat steps on the right side.

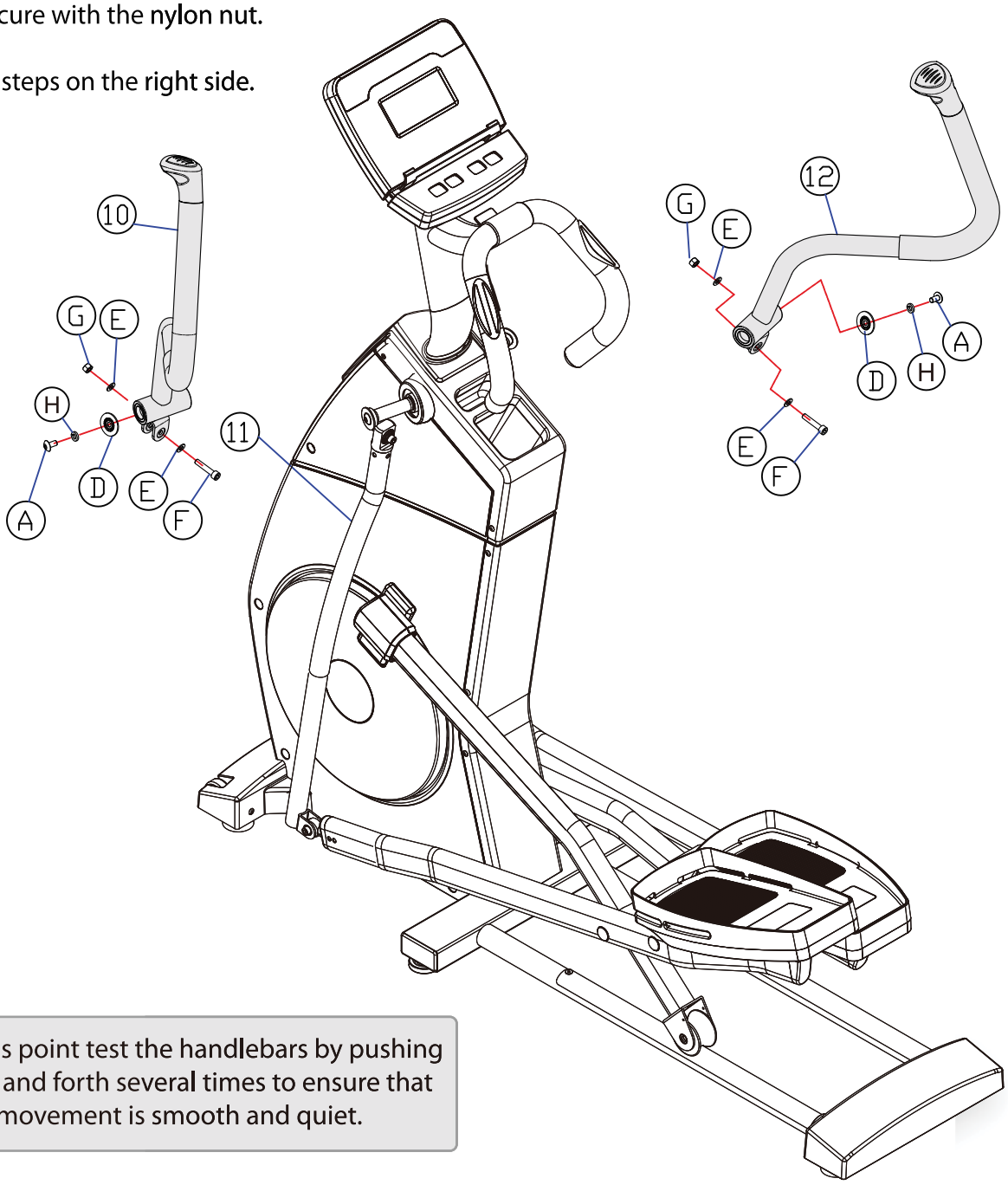

Note: At this point test the handlebars by pushing them back and forth several times to ensure that the movement is smooth and quiet.

Step 4: Attach Misc. Plastics

A. Locate the handlebar pivot covers (14) and (15).

B. Align them over the pivot joint and press together so they snap in place. Repeat on the opposite side.

C. Locate lower handlebar joint covers (16) and (17)

D. Align them over the lower joint and press together so they snap in place. Repeat on the opposite side.

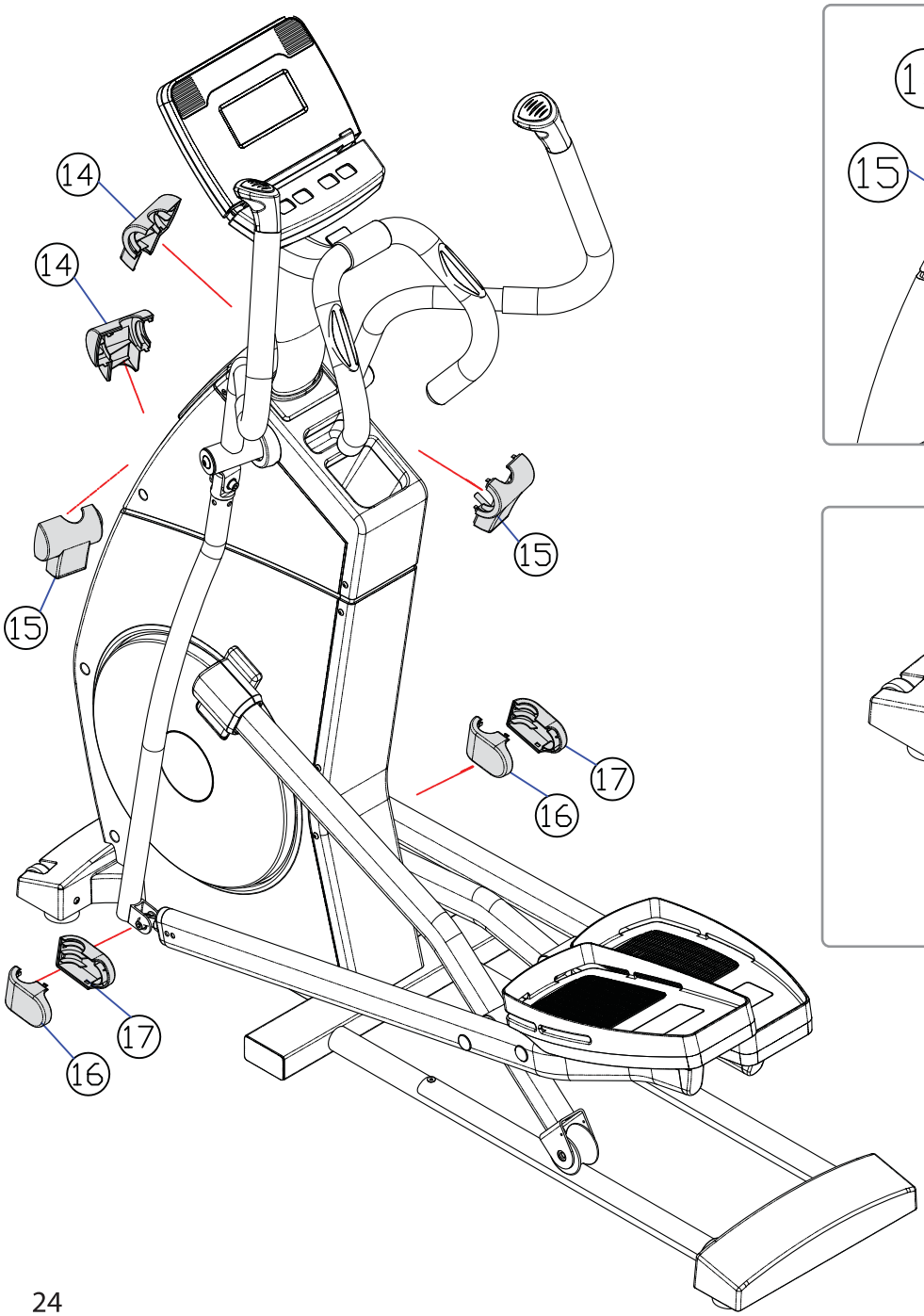

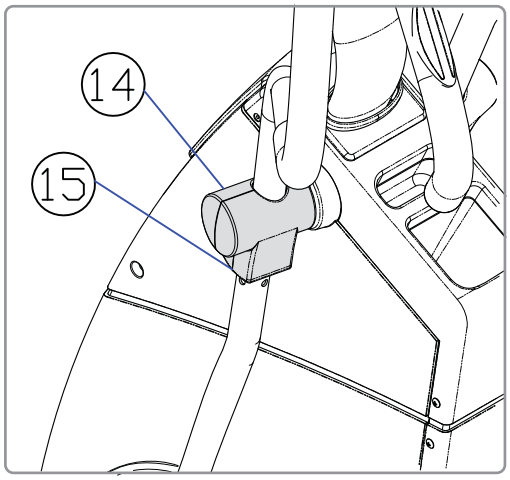

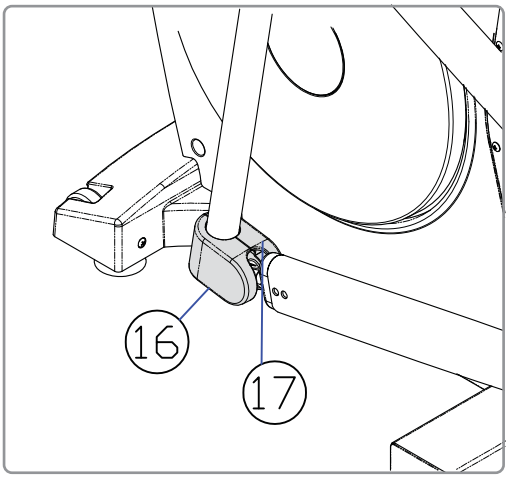

Display Console Overview

Console Buttons

Quickstart: Press the START button to begin a Manual workout without having to set any individual information. When the program begins your workout time will start counting up from 00:00 and you can manually adjust the resistance using the UP and Down arrows.

Pause: If you need to temporarily stop your workout, press the START button to PAUSE. To RESTART the workout, press the START button. After 5 minutes the console will reset.

Reset: To reset the console, press the START button for 3 seconds.

Enter: The ENTER button is used to Select each piece of information needed during program setup including Program, Workout Level, Workout Time, and Your Weight, which is used to more accurately calculate calories burned. If you do not enter a Weight the system will use 150 lbs to calculate calories burned.

Arrows: These buttons are used to modify the value of each selection entered during the set up process and to change the workout resistance during use.

Display Console Overview

Display Window

Program Profile: The EL1000 console includes an advanced 16 row by 20 column program matrix supporting advanced exercise programs. Each program includes 3 difficulty levels that you can select during program set-up to better match your personal workout objectives. The level of resistance in your work out is represented by the number of rows illuminated in the Program Matrix.

You can scan through each program profile using the UP and DOWN arrows during program set-up.

Display Feedback: The EL1000 display will simultaneous present the following feedback information:

Time: the workout time elapsed or the workout time remaining

Speed: this is the speed you are traveling in Miles Per Hour (this reading can be changed to Kilometers Per Hour by using the Engineering Mode)

Distance: this total distance traveled in miles or kilometers since the beginning of the workout.

Calories: estimated calories burned since the beginning of the workout.

Pulse: your measured heart rate using the hand pulse sensors located on the bull horn hand grips.

Load: is the resistance level you are using.

Reading Your Heart Rate

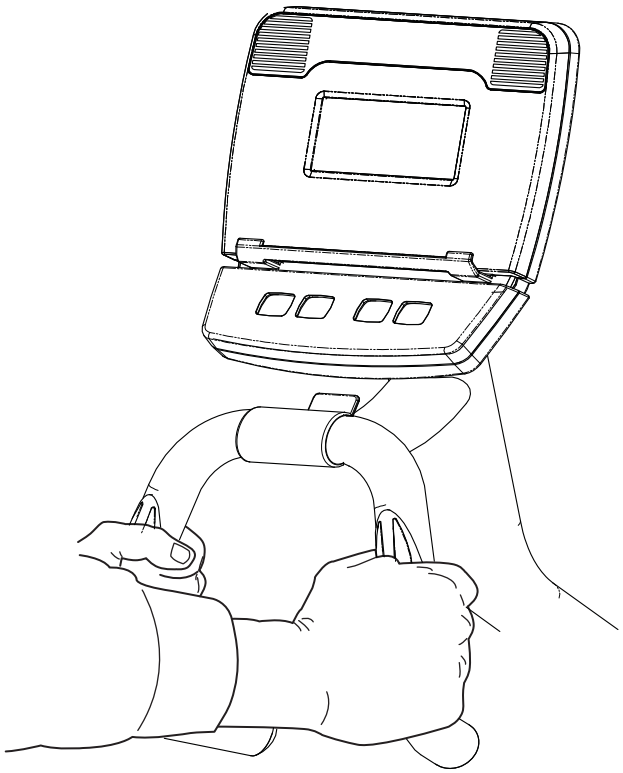

Contact Heart Rate Sensors are built into the stationary hand grips to monitor your heart rate during exercise. To use, grasp the sensors with a comfortable grip, with the palms of your hands placed over the sensors. If the sensors are having difficulty picking up your heart rate you may consider using aloe or a moisturizer on your hands or you can warm up as you exercise to increase the moisture in your hands. Dry hands do not transfer your pulse as effectively as moist hands.

Do not squeeze tightly as this can cause your blood pressure to rise. It will take a few seconds for the console to calculate your heart rate accurately.

Remember that to use the My Zone Heart Rate Control Programs you will need to keep your hands on the sensors.

Program Overview

The EL1000 comes with an assortment of programs that will give you the variety you need to get the maximum results from your exercise program. Each preset program has 3 levels of difficulty that you can select from during the set up process.

P1 – Weight Management – Steady Pace

Improve your fitness while also stimulating your body to burn more fat with this Weight Management workout. Most "Steady Pace" workouts focus on maintaining one set workload level throughout the entire workout. The LifeSpan EL 1000 Weight Management Steady Pace workout has been designed to elevate your exercise heartrate to a working level that will give you maximum calorie burn, with slight variations in your exercise intensity. Your intensity level will start out at a very slow pace, then increase to a moderate pace, and then vary for the duration of your workout from within a low moderate intensity to a high moderate intensity. The goal of this workout is to maintain a steady pace from within a set minimum and maximum effort range that has been selected to target ideal calorie utilization throughout the workout.

Segments	1	2	3	4	5	6	7	8	9	10	11	12	13	14	15	16	17	18	19	20
Level 1	1	1	2	3	4	3	2	3	4	3	2	3	4	3	3	2	2	1	1	1
Level 2	2	2	3	4	5	4	3	4	5	4	3	4	5	4	4	3	3	2	2	2
Level 3	3	3	4	5	6	5	4	5	6	5	4	5	6	5	5	4	4	3	3	3

P2 –Pyramid Climb

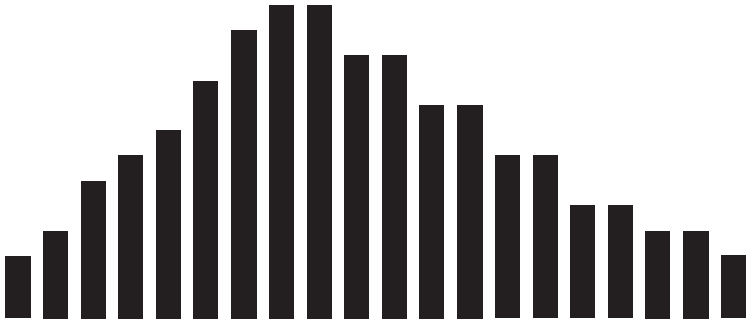

Gradual increases in intensity during your workouts are ideal to stimulate your body to improve overall cardiovascular fitness, while also maximizing muscle cell development in working muscles. The LifeSpan EL 1000 Pyramid Climb workout has been designed to start out at a very slow, comfortable pace and gradually increase to a peak intensity then gradually decrease in intensity back down to your starting level. You will maximize overall calorie burn during the peak intensity levels of this workout while allowing your body to exercise for a longer duration and still benefit from the higher intensity workout as you gradually slow down in this workout and return to your starting level.

Segments	1	2	3	4	5	6	7	8	9	10	11	12	13	14	15	16	17	18	19	20
Level 1	1	2	3	4	5	6	7	8	8	7	7	6	6	5	5	4	4	3	3	2
Level 2	2	3	5	6	7	9	11	12	12	10	10	8	8	6	6	4	4	3	3	2
Level 3	3	4	6	7	8	11	13	15	15	14	14	12	12	10	10	8	8	6	6	4

Program Overview

P 3 –Uphill Interval

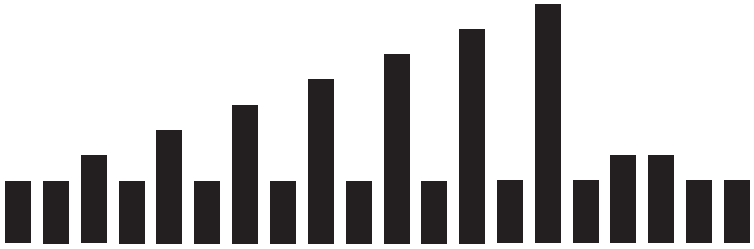

Uphill interval workouts are unique in that they provide your body with the benefits of an interval workout, with the added benefit of gradually increasing the overall intensity of the maximum level intervals throughout the workout. In this workout you should begin at a level that is comfortable, and then you will gradually increase the intensity during each maximum interval, pushing yourself to a slightly higher intensity each time knowing that you have a recovery interval as soon as you complete the maximum intensity interval. During this workout you will also maximize overall calorie burn during each of your higher intensity intervals, while at the same time working on improving your overall anaerobic fitness.

Segments	1	2	3	4	5	6	7	8	9	10	11	12	13	14	15	16	17	18	19	20
Level 1	1	1	2	1	3	1	4	1	5	1	6	1	7	1	8	1	2	2	1	1
Level 2	2	2	3	2	4	2	5	2	6	2	7	2	8	2	9	2	3	3	2	2
Level 3	3	3	4	3	5	3	6	3	7	3	8	3	9	3	10	3	4	4	3	3

P4–Heart Health – Ladder

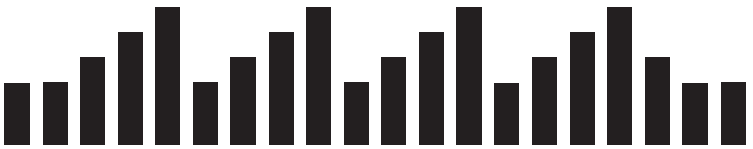

One of the greatest benefits of exercise are the direct benefits exercise has on the heart and cardiovascular system. Elliptical exercise in particular is ideal for the human body because you may exercise both the upper and lower body, achieving a full body workout in one exercise session. The Heart Health Ladder has been specifically designed to provide your heart and cardiovascular system with a series of progressively harder exercise intensity's that will improve your overall aerobic endurance, while also stimulating your anaerobic endurance. Remember as you go through this workout that it may be challenging for a few minutes, but each progression has been carefully timed to also provide recovery intervals after the highest intensity interval, so you can feel good as you exercise and comfortably push yourself to improve your cardiovascular fitness.

Segments	1	2	3	4	5	6	7	8	9	10	11	12	13	14	15	16	17	18	19	20
Level 1	1	1	2	3	4	1	2	3	4	1	2	3	4	1	2	3	4	2	1	1
Level 2	2	2	3	4	5	2	3	4	5	2	3	4	5	2	3	4	5	3	2	2
Level 3	4	4	5	6	7	4	5	6	7	4	5	6	7	4	5	6	7	4	3	3

Program Overview

P5– Heart Health – Interval

Heart Health Interval workouts have been found in research studies to be ideal for those striving to increase their weight loss, and improve their overall cardiovascular fitness. Varying your exercise intensity during a workout from a moderately slow level to a high intensity for a set period of time and repeating that progression for a complete workout will maximize the total number of calories burned during a workout. A second benefit is the individual will not be forced to maintain a high intensity exercise level throughout the entire workout. The short interval recovery periods allow the body to more successfully exercise at a higher intensity than might otherwise be comfortable for the individual for a complete workout duration.

Segments	1	2	3	4	5	6	7	8	9	10	11	12	13	14	15	16	17	18	19	20
Level 1	1	2	5	2	5	2	5	2	5	2	5	2	5	2	5	2	5	2	3	2
Level 2	2	3	7	3	7	3	7	3	7	3	7	3	7	3	7	3	7	3	4	3
Level 3	3	4	9	4	9	4	9	4	9	4	9	4	9	4	9	4	9	4	5	4

P6–Weight Management - Uphill Walk

The Weight Management Uphill Walk on the LifeSpan EL 1000 has been designed to provide your body with a steady state workout that begins with a slight increase in exercise intensity, then continues the workout at a set intensity, and ends with a progressive decrease in exercise intensity. A steady state workout with an increase and decrease in exercise intensity at the beginning and end of the workout will most ideally develop your overall aerobic cardiovascular endurance. Steady state workouts are also ideal for maximizing calorie burn, but most ideally when done for a longer duration, such as 40 or 50 minutes. Steady state workouts are also ideal when you are returning to exercise after having been off for a period of time. After being away from your exercise program you may need to exercise for a shorter period of time than the usual goal of 40 or 50 minutes. This workout may also be an ideal workout for days when you are a bit more tired than usual, and are looking for a nice, steady state workout for your body and mind.

Segments	1	2	3	4	5	6	7	8	9	10	11	12	13	14	15	16	17	18	19	20
Level 1	1	1	2	2	3	3	3	3	3	3	3	3	3	3	3	3	2	2	1	1
Level 2	1	2	3	3	4	4	4	4	4	4	4	4	4	4	4	4	3	2	1	1
Level 3	2	3	4	4	5	5	5	5	5	5	5	5	5	5	5	5	4	3	2	1

Program Overview

P7 –Rolling Hills

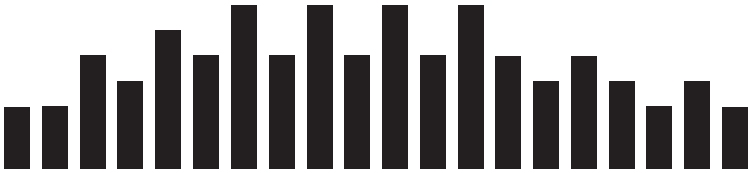

Varying your exercise intensity with a repetitive interval workout that starts out at an easy pace and then increases to a moderate or higher intensity pace will add some great variety into your workouts, make your workouts go by faster than you ever imagined while providing your body and mind with great fitness benefits. Constantly varying intensities in a workout have been found in brain research to have great benefits on improving overall brain fitness. Increasing your exercise intensity at a set interval pace and then dropping that intensity to just a slightly lower level, and then returning to the higher level has great anaerobic cardiovascular fitness development on the body. You know you are adequately pushing yourself in the higher intensity intervals if you find you can still talk during the exercise, but if you can "sing" you might consider pushing yourself a bit harder.

Segments	1	2	3	4	5	6	7	8	9	10	11	12	13	14	15	16	17	18	19	20
Level 1	1	1	3	2	4	3	5	3	5	3	5	3	5	3	2	3	2	1	2	1
Level 2	2	2	4	3	5	4	6	4	6	4	6	4	6	4	3	4	3	2	3	2
Level 3	3	3	5	4	6	5	7	5	7	5	7	4	7	5	4	5	4	3	4	3

P8–Plateau Climb

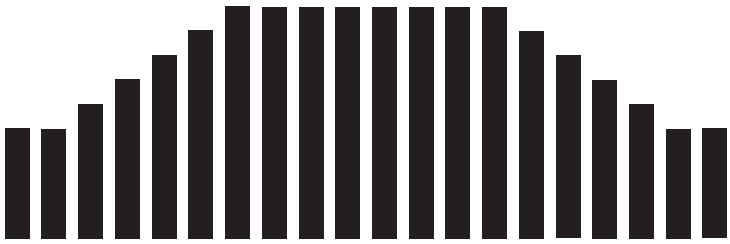

A Plateau Climb workout will provide you with all the benefits of the other steady state workouts such as "Weight Management Uphill Walk" but push you to maintain a higher steady state intensity exercise level. As you improve your overall health and fitness you can slowly and of course always comfortably push yourself to higher overall exercise intensity for longer periods of time. Remember, if you simply get on your elliptical and go at the same pace, for the same amount of time every day when you workout, your body will only improve to the level of the workouts you are currently pushing yourself to do. In order to improve your overall health and fitness, you need to always "change" your workouts so you don't do the same workout within one week, while at the same time slowly increase your overall exercise intensity while also increasing your overall exercise time.

Segments	1	2	3	4	5	6	7	8	9	10	11	12	13	14	15	16	17	18	19	20
Level 1	2	2	3	4	5	6	7	7	7	7	7	7	7	7	6	5	4	3	2	2
Level 2	4	4	5	6	7	8	9	9	9	9	9	9	9	9	8	7	6	5	4	4
Level 3	6	6	7	8	9	10	11	11	11	11	11	11	11	11	10	9	8	7	6	6

Custom User Set-up Programs

There are two user programs provided on the EL1000 elliptical trainer. These programs provide you with the ability to establish a customized program profile specific to your workout requirements. For each user set-up program you can select the resistance level for each of the 20 program matrix columns by pressing the up/down buttons to adjust the desired level of resistance and then the enter button to select that specific level.

Once a program is set up, simply scroll to the User program and push the start button. To modify the program after it is established, select the program and then push the Enter button.

My Zone Heart Rate Control Programs

The EL1000 comes with 2 MyZone Heart Rate control programs. In each of these programs you will set your target heart rate and the elliptical will automatically adjust the resistance to maintain your heart rate at either a CONSTANT level or at an alternating LOW and HIGH level.

You will need to use the hand pulse sensor to receive your heart rate throughout the course of the work-out.

Constant Heart Rate Control (HRC1): The "Constant" program lets you select a single heart rate that you want to maintain throughout your workout. Typically for Weight Loss set the target at 65% of your predicted maximum heart rate and for Cardio Training set the target at 80% of your predicted maximum After 3 minutes of warm up the pedaling resistance will automatically be adjusted every 10 seconds to get your heart rate up to the preset level that you selected and then maintain your heart rate during the work-out. Refer to the Heart Rate Training section of this to determine your optimal training zones based on your age and exercise objectives or visit:

http://www.lifespanfitness.com/article_weight_calc2.asp.

Interval Heart Rate Control (HRC2): The "Interval" program is designed to help you increase our aerobic endurance and improve heart rate recovery. This program lets you select a LOW or recovery target heart rate and a HIGH target. After a 3 minute warm-up the console will adjust the pedaling resistance every 10 seconds to maintain your heart rate at the LOW or recovery target for 2 minutes. Then the console will adjust the resistance to raise your heart rate to the HIGH target that you selected and once again keep it at this level for 2 minutes. After holding your heart rate at this HIGH setting for 2 minutes the resistance will be reduced every 10 seconds until you reach the LOW level and then repeat the process until the end of the workout. It is recommended that you set the workout time to 25 minutes or higher to use this program effectively.

Operating Your Display Console

Starting in Manual

The quickest way to get started is to press the START button. Pressing the START button will select the Manual program and the TIME will start counting up from 00:00. Your can also press ENTER to select the Manual program. Using the ENTER button will allow you to set a specific workout TIME, and set your WEIGHT for more accurate calorie calculation.

Starting a Preset Program

1. **Select Program -** Use the Up / Down arrow keys to select your desired Exercise Program. Remember that each program has 3 levels of difficulty from which you can select. The program presented in the matrix represents Level 1 of the selected program. Press the Enter button to select.
2. **Select Difficulty Level -** Select the program difficulty LEVEL using the UP / DOWN arrow keys. Press Enter.
3. **Set Time -** Set the program TIME of your workout using the UP / DOWN arrow keys. Press Enter.
4. **Set Weight -** Set your WEIGHT in the console for more accurate calorie calculation using the UP / DOWN arrow keys. Press Enter
5. Press the **START** button to begin your workout.

Custom User Set-up Programs

User programs need to be set-up before they can be used. To set up a user program:

1. **Select USER1 or USER 2 Programs -** Use the Up / Down arrow keys to select the USER1 or USER2 programs. Press Enter.
2. **Set Resistance Level -** Select the level of resistance for each segment in the exercise program. Press Enter and repeat until all 20 segments are complete.
3. **START** – press the START button.

Once the program has been set up, simply scroll to the USER1 or USER2 program and press START.

Using Heart Rate Control Programs

The constant Heart Rate Control program requires that you set a heart rate that the display console will maintain throughout the workout and the Interval requires that you set a LOW and a HIGH heart rate.

HRC – Constant:

1. **Select HRC1 -** Use the Up / Down arrow keys to select the HRC1 program. Press the Enter button to select.
2. **Set Time -** Set the program TIME using the UP / DOWN arrow keys. Press Enter. Remember that the program will include 3 minutes of warm up and 3 minutes of cool down.
3. **Set Weight** – enter your weight using the UP / Down arrow keys. Press Enter
4. **Set Age-** enter your age using the UP / DOWN arrow keys. Press Enter
5. **Set Heart Target Rate -** set your target heart rate using the UP / DOWN arrow keys. Press Enter
6. Press the **START** button to begin your workout.

Operating Your Display Console (continued)

HRC – Interval:

1. **Select HRC2 -** Use the Up / Down arrow keys to select the HRC 2 program. Press the Enter button to select.
2. **Set Time -** Set the program TIME using the UP / DOWN arrow keys. Press Enter. Remember that the program will include 3 minutes of warm up and 3 minutes of cool down.
3. **Set Weight** – enter your weight using the UP / Down arrow keys. Press Enter
4. **Set Age-** enter your age using the UP / DOWN arrow keys. Press Enter
5. **Set HIGH Heart Target Rate -** Set your HIGH Interval training rate using the UP / DOWN arrow keys. Press Enter.
6. **Set LOW Target Heart Rate -** Set your LOW Interval training rate using the UP / DOWN arrow keys. Press Enter.
7. Press the **START** button to begin your workout.

Operations

While exercising you can change the Resistance Level by pressing the UP / DOWN buttons. To pause your exercise program press the START button and to reset your program, press the START button for 3 seconds.

Leveling

LifeSpan elliptical trainers come with four leveling feet - two in the front and two in the back. Locate your elliptical trainer on a solid, level surface. Make sure that the center Adjustable feet, located on the center frame brace sit level on the floor. Try to rock the elliptical in all directions to see if any of the feet on not touching the floor. If the elliptical rocks, adjust the feet that are not touching the floor upward to eliminate any rocking. Once the frame is completely stable, secure the feet in place by tightening the lock nut on each foot.

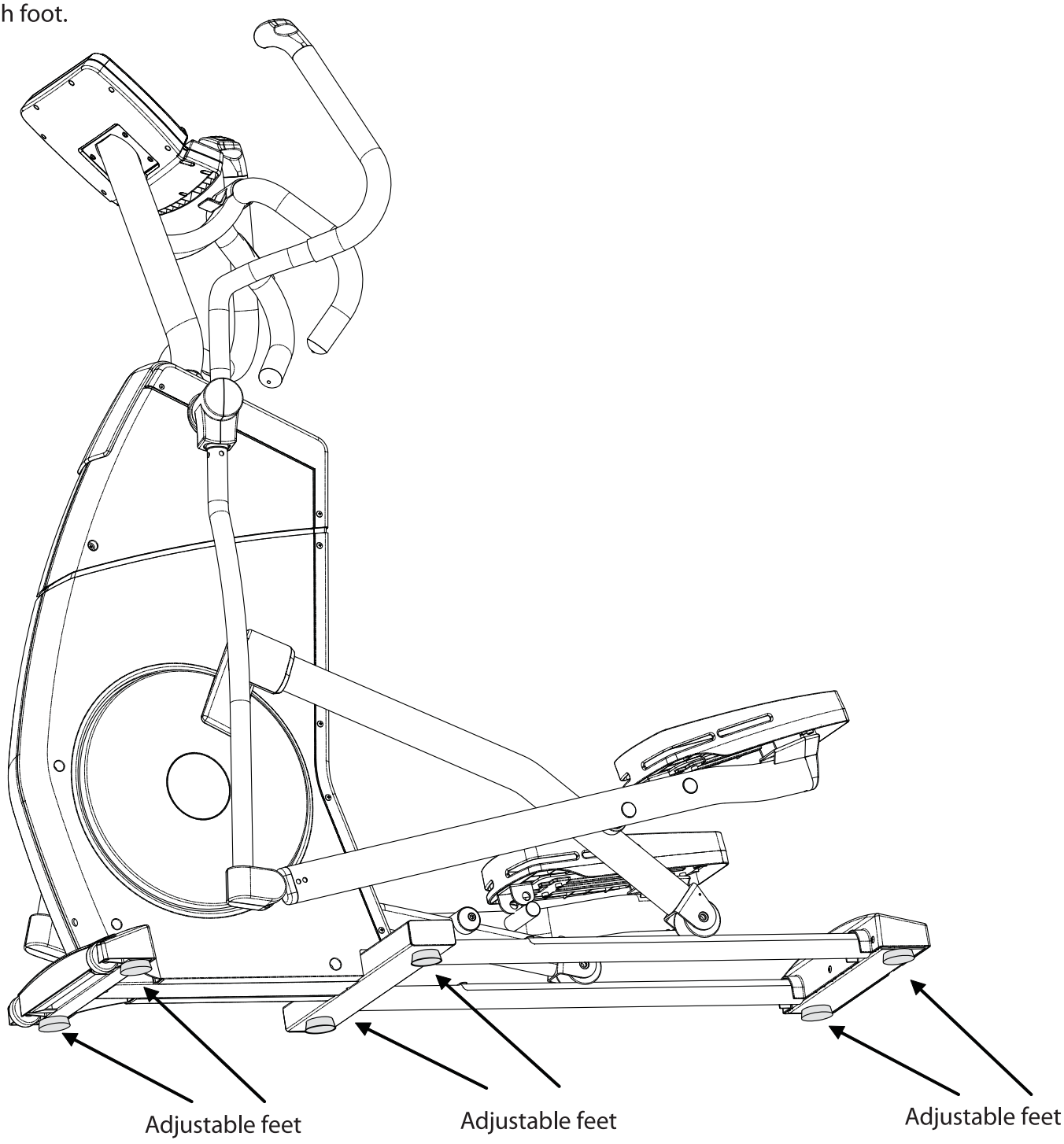

Moving

Your LifeSpan elliptical is equipped with transportation wheels located in the front of the base. To move, lift up on the back end of the frame making sure to bend your knees and lift with your back. Make sure that you have clearance in the front as you lift up on the back end of the frame. Rellocate the elliptical by rolling the elliptical on these front wheels. Be careful not to scuff or mark floors as the roller wheels will be carrying a heavy load. After moving, make sure you proper level the frame.

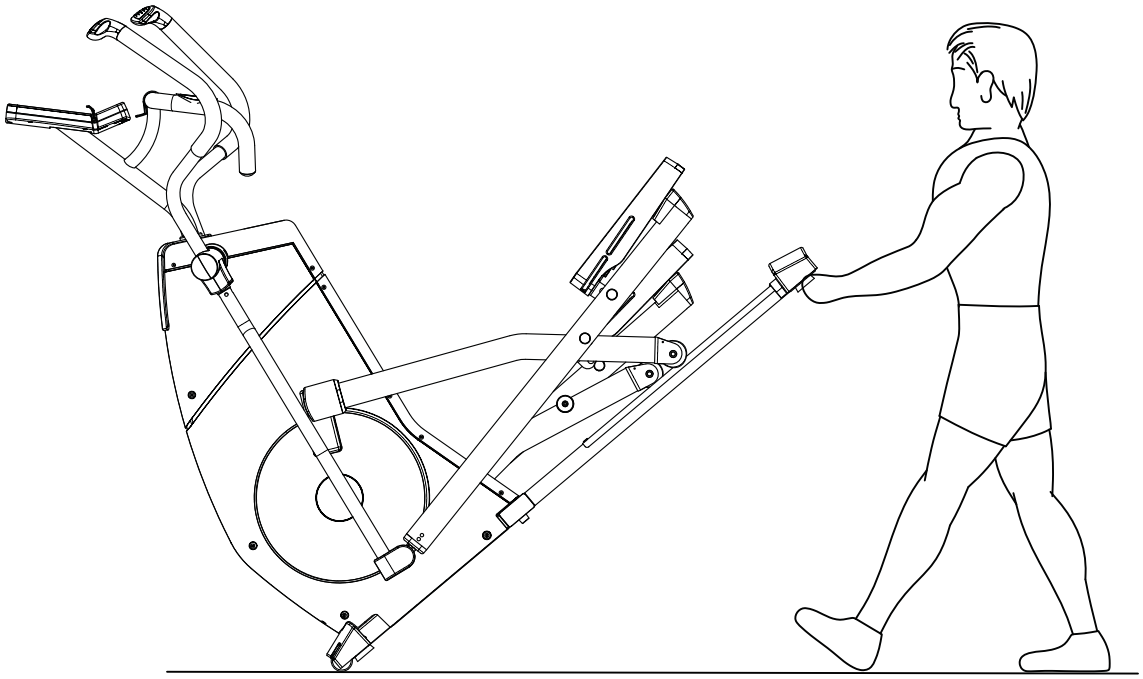

Troubleshooting

Problem: Unit is unstable or rocks while in use.
Solution: Make sure unit is on a solid, level surface. Adjust the front and rear adjustment feet until all 6 feet are sitting solid on the floor.
Problem: No power at console.
Solution: Try using another outlet or testing something else at the outlet being used to make sure there is power at the outlet. If still a problem contact LifeSpan Customer Service.
Problem: Rough feeling in pedals when in use.
Solution: Clean the rails with a dry cloth. Any debris on the rails will give a rough feeling when in use.
Problem: Excess play in the handlebars or pedals.
Solution: Using the provided assembly tools, go over the Elliptical to make sure all assembly hardware is tight.

General Maintenance

1. Keep the unit clean and dry. It is a good idea to wipe the unit down after each workout to keep it clean.
2. Some material from the Roller Wheels will come off and leave deposits on the rails, this is normal. With a dry towel wipe the rails down as needed. Any debris on the rails can create a rough feeling in the pedals.
3. If the unit is not going to be used for any extended period of time it is a good idea to unplug the unit and store in a clean environment.

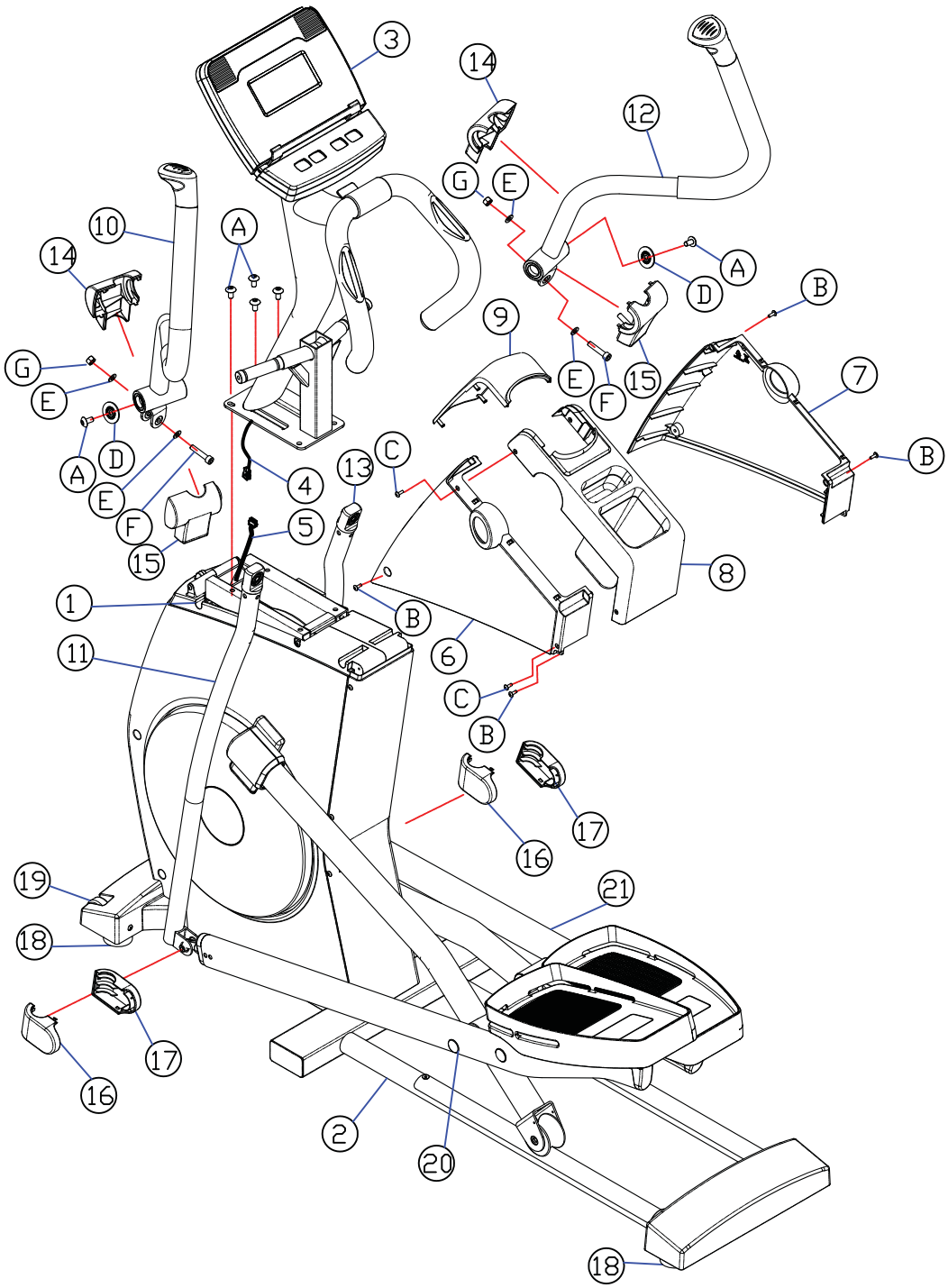
3
14
12
G
E
10
A
14
A
D
B
9
G
E
E
F
15
7
A
D
E
F
15
4
13
C
B
5
8
1
B
11
6
C
B
17
16
19
21
18
17
16
2
20
18

LifeSpan by PCE HEALTH & FITNESS

EL1000
Natural Fit Elliptical

ELLIPTICAL MODEL NUMBER - ***EL1000***
NET WEIGHT : 167.6 lbs
GROSS WEIGHT : 185.2 lbs
CUBIC FEET : 61″L x 23″W x 32″H
SERIAL NUMBER :

MADE IN TAIWAN

8 55959 00047 8